Undiscounted infinite horizon multi-objective optimal control problems

Ana Paula Chorobura
Universidade Estadual de Mato Grosso do Sul - UEMS

Latin American Cogress on Industrial and Applied Mathematics - LACIAM 2023

Rio de Janeiro, February 2, 2023

Outline

- Undiscounted infinite horizon multi-objective optimal control problem
- Pareto optimality
- Auxiliary Control Problem
- Characterization of the (weak) Pareto front
- Relaxation in absence of state constraints and ε-Pareto optimality

Problem statement

$$(MOCP)\begin{cases} \inf & \left(\int_{t_0}^{+\infty} \ell_1(t, y(t), u(t))dt, \ldots, \int_{t_0}^{+\infty} \ell_p(t, y(t), u(t))dt\right) \\ \text{s.t.} & \dot{y}(t) = f(t, y(t), u(t)), \\ & y(t_0) = x, \\ & y(t) \in \mathcal{K} \quad \text{for all } t \geq t_0, \\ & u \in \mathbb{U} \end{cases}$$

where

- $\ell_i : \mathbb{R}_+ \times \mathbb{R}^n \times \mathbb{R}^m \to \mathbb{R}$, for $i = 1, \ldots, p$, $f : \mathbb{R}_+ \times \mathbb{R}^n \times \mathbb{R}^m \to \mathbb{R}^n$ are Lipschitz continuous functions;
- $\mathbb{U} = \left\{ u : [0, +\infty) \to \mathbb{R}^m \text{ measurable, } u(t) \in U(t) \text{ a.e.} \right\}$;
- $U : \mathbb{R}_+ \to \mathbb{R}^m$ is a measurable set-valued function with closed images;
- $\mathcal{K}$ is a nonempty and closed subset of $\mathbb{R}^n$.

Pareto optimality

$$\begin{array}{ll} \text{minimize} & g(x) = (g_1(x), g_2(x), \ldots, g_n(x)) \\ \text{suject to} & x \in X \end{array}$$

- $x^* \in X$ is a **Pareto solution** if there exists no $x \in X$ such that $g(x) \neq g(x^*)$ and

$$g_i(x) \leq g_i(x^*), \qquad \text{for all } i = 1, \ldots, n.$$

- $x^* \in X$ is a **weak Pareto solution** if there exists no $x \in X$ such that

$$g_i(x) < g_i(x^*), \qquad \text{for all } i = 1, \ldots, n.$$

- Set of Pareto and weak Pareto solutions: P and P_w.
- Pareto and weak Pareto front:

$$\mathcal{F} = \{g(x) \mid \ x \in P\}, \qquad \mathcal{F}_w = \{g(x) \mid \ x \in P_w\}.$$

Example: Pareto optimality

$$\text{Minimize} \quad J(x) = (-x_1, -x_2)$$

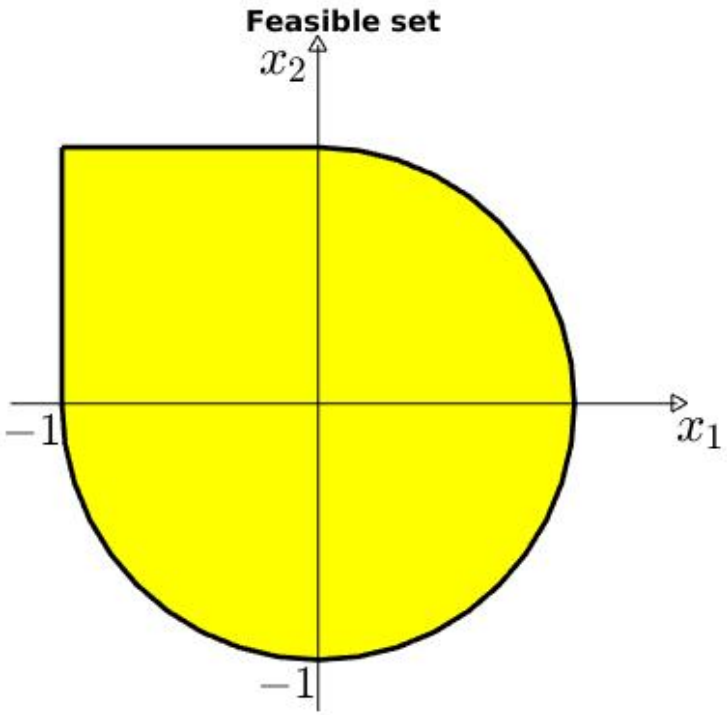

Example: Pareto optimality

$$\text{Minimize} \quad J(x) = (-x_1, -x_2)$$

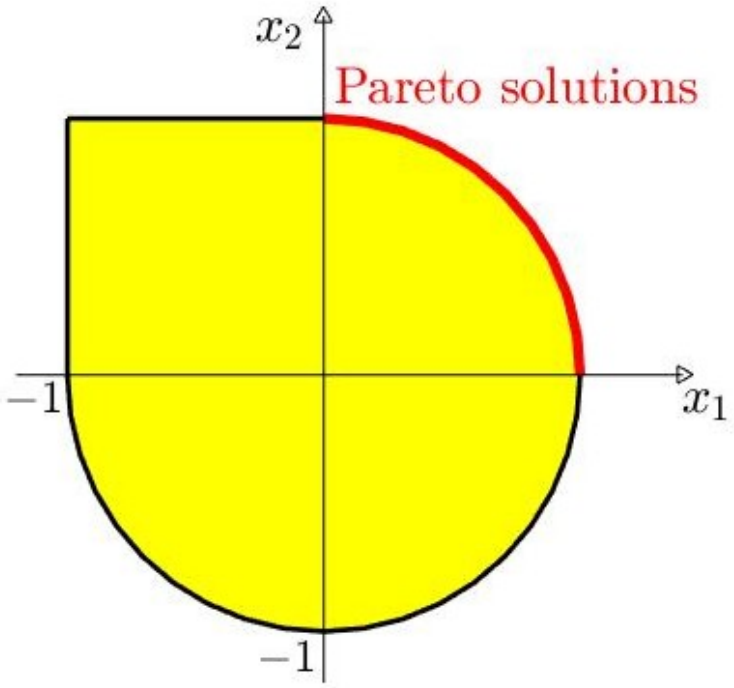

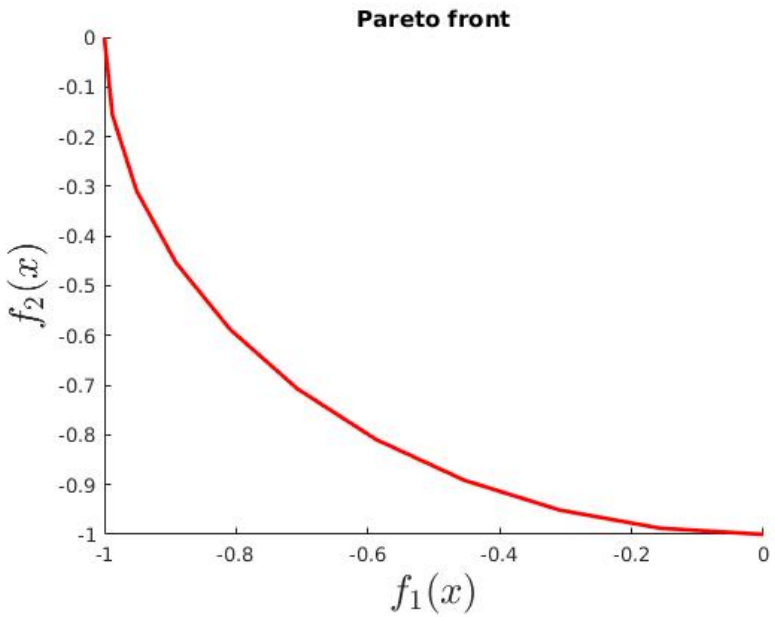

Example: Pareto optimality

$$\text{Minimize} \quad J(x) = (-x_1, -x_2)$$

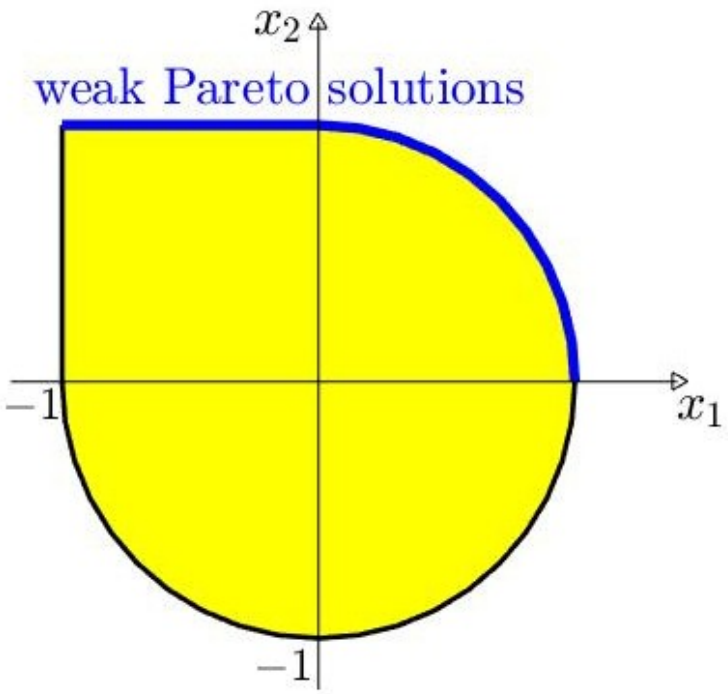

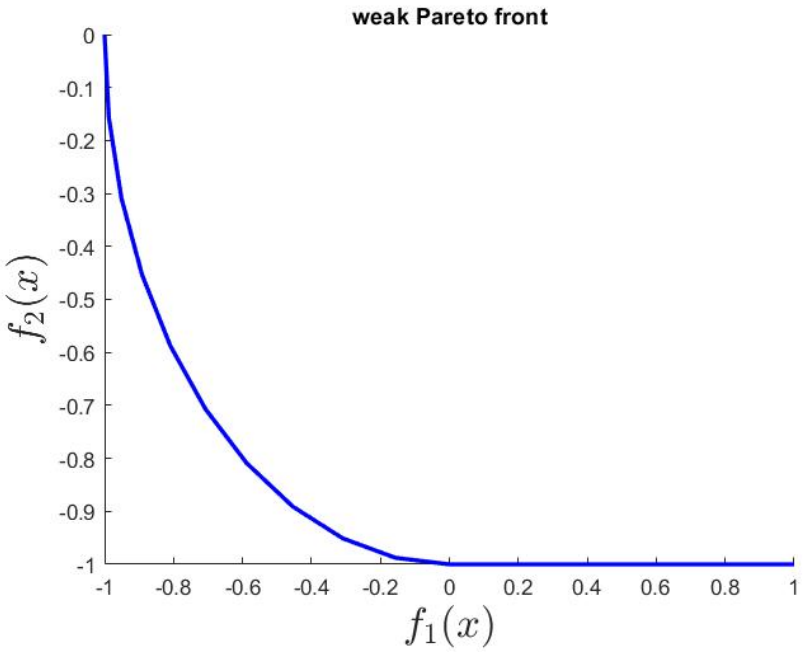

Auxiliary control problem

For an augmented state vector $(\mathrm{x}, \mathrm{z}) \in \mathbb{R}^n \times \mathbb{R}^p$, introduce the augmented dynamical system as:

$$\begin{cases} \dot{y}(t) = f(t, y(t), u(t)), & \text{for a.e } t \geq 0 \\ \dot{\zeta}(t) = -\ell(t, y(t), u(t)), & \text{for a.e } t \geq 0 \\ y(\mathrm{t}_0) = \mathrm{x}, \ \zeta(\mathrm{t}_0) = \mathrm{z}. \end{cases} \tag{1}$$

Auxiliary control problem

For an augmented state vector $(\mathrm{x}, \mathrm{z}) \in \mathbb{R}^n \times \mathbb{R}^p$, introduce the augmented dynamical system as:

$$\begin{cases} \dot{y}(t) = f(t, y(t), u(t)), & \text{for a.e } t \geq 0 \\ \dot{\zeta}(t) = -\ell(t, y(t), u(t)), & \text{for a.e } t \geq 0 \\ y(\mathrm{t}_0) = \mathrm{x}, \ \zeta(\mathrm{t}_0) = \mathrm{z}. \end{cases} \tag{1}$$

Denote the set of admissible pairs trajectory-control by

$$S(\mathrm{t}_0, x, z) = \{(\mathrm{y}, \zeta) \text{ solution of } (1) \text{ for some } u \in \mathbb{U}\}.$$

Auxiliary control problem

For an augmented state vector $(\mathrm{x}, \mathrm{z}) \in \mathbb{R}^n \times \mathbb{R}^p$, introduce the augmented dynamical system as:

$$\begin{cases} \dot{y}(t) = f(t, y(t), u(t)), & \text{for a.e } t \geq 0 \\ \dot{\zeta}(t) = -\ell(t, y(t), u(t)), & \text{for a.e } t \geq 0 \\ y(\mathrm{t}_0) = \mathrm{x}, \ \zeta(\mathrm{t}_0) = \mathrm{z}. \end{cases} \tag{1}$$

Denote the set of admissible pairs trajectory-control by

$$S(\mathrm{t}_0, x, z) = \{(\mathrm{y}, \zeta) \text{ solution of } (1) \text{ for some } u \in \mathbb{U}\}.$$

Define a Lipschitz and bounded function $g : \mathbb{R}^n \to \mathbb{R}$ such that

$$g(x) \leq 0 \Leftrightarrow x \in K,$$

Auxiliary control problem

For an augmented state vector $(\mathrm{x}, \mathrm{z}) \in \mathbb{R}^n \times \mathbb{R}^p$, introduce the augmented dynamical system as:

$$\begin{cases} \dot{y}(t) = f(t, y(t), u(t)), & \text{for a.e } t \geq 0 \\ \dot{\zeta}(t) = -\ell(t, y(t), u(t)), & \text{for a.e } t \geq 0 \\ y(\mathrm{t}_0) = \mathrm{x}, \ \zeta(\mathrm{t}_0) = \mathrm{z}. \end{cases} \tag{1}$$

Denote the set of admissible pairs trajectory-control by

$$S(\mathrm{t}_0, x, z) = \{(\mathrm{y}, \zeta) \text{ solution of } (1) \text{ for some } u \in \mathbb{U}\}.$$

Define a Lipschitz and bounded function $g : \mathbb{R}^n \to \mathbb{R}$ such that

$$g(x) \leq 0 \Leftrightarrow x \in K,$$

and the auxiliary control problem

$$W(\mathrm{t}_0, \mathrm{x}, \mathrm{z}) = \inf_{(y,\zeta) \in S(\mathrm{t}_0, x, z)} \left[\bigvee_{i=1}^{p} \left(\int_{\mathrm{t}_0}^{+\infty} \ell_i(t, y^u_{\mathrm{t}_0,\mathrm{x}}(t), u(t)) dt - \mathrm{z}_i \right) \right] \bigvee \sup_{\theta \in [\mathrm{t}_0, +\infty)} g\left(y^u_{\mathrm{t}_0,\mathrm{x}}(\theta)\right)$$

Assumptions

- There exist $\beta_i \in L^1_{loc}(\mathbb{R}_+;\mathbb{R}_+)$ and increasing functions $h_i : \mathbb{R}_+ \to \mathbb{R}_+$, such that for a.e $t \in \mathbb{R}_+$, $|\ell_i(t,y,u)| \leq \beta_i(t)h_i(|y|), \forall y \in \mathbb{R}^n, u \in \mathbb{U} \quad i = 1,\ldots,p;$

- There exists S such that $|\ell_i(t,y,u)| \leq \alpha_i(t),\ i = 1,\ldots,p$, for a.e. $t \geq S$ and all $y \in \mathbb{R}^n$, $u \in \mathbb{U}$, where $\alpha_i : [S,+\infty) \to \mathbb{R}_+$ are integrable on $[S,+\infty)$;

- For a.e. $t \in \mathbb{R}_+$ and for every $y \in \mathbb{R}^n$, the set $G(t,x) = \left\{ \begin{pmatrix} f(t,y,u) \\ \ell(t,y,u)+\eta \end{pmatrix}, u \in \mathbb{U}, \eta \in \mathbb{R}^r, \text{ and } \eta \geq 0 \right\}$, is a closed and convex subset of $\mathbb{R}^n \times \mathbb{R}^p$.

Some properties of the auxiliary control problem

- W takes values in $(-\infty, +\infty)$ and for every $(\mathrm{t}_0, \mathrm{x}, \mathrm{z}) \in \mathbb{R}^n \times \mathbb{R}^p$, there exists a control $u \in \mathbb{U}$ that is a minimizer of the auxiliary control problem.

- W is continuous and $\lim_{t \to +\infty} W(t, \mathrm{x}, \mathrm{z}) = \left[\bigvee_{i=1}^{p} -\mathrm{z}_i \right] \bigvee g(\mathrm{x})$.

- W is monotone with respect to the third argument, that is, for $(\mathrm{t}_0, \mathrm{x}) \in dom(W)$ and $\mathrm{z}, \mathrm{z}' \in \mathbb{R}^r$,

$$\mathrm{z} \leq \mathrm{z}' \Rightarrow W(\mathrm{t}_0, \mathrm{x}, \mathrm{z}) \geq W(\mathrm{t}_0, \mathrm{x}, \mathrm{z}').$$

- W satisfies the following Dynamic Programming Principle: for all $h \geq 0$ and $(\mathrm{t}_0, \mathrm{x}, \mathrm{z}) \in \mathbb{R}_+ \times \mathbb{R}^n \times \mathbb{R}^p$, we have

$$W(\mathrm{t}_0, \mathrm{x}, \mathrm{z}) = \min_{(y,\zeta) \in S(\mathrm{t}_0, x, z)} \left\{ W(\mathrm{t}_0 + h, y^u_{\mathrm{t}_0,\mathrm{x}}(\mathrm{t}_0 + h), \zeta^u_{\mathrm{t}_0,(\mathrm{x},\mathrm{z})}(\mathrm{t}_0 + h)) \bigvee \max_{\theta \in [\mathrm{t}_0, \mathrm{t}_0 + h]} g(y^u_{\mathrm{t}_0,\mathrm{x}}(\theta)) \right\}$$

Hamilton-Jacobi-Bellman equation

Theorem

The function W is the unique continuous viscosity solution of the following HJB equation:

$$\min\left(-\partial_{\mathrm{t}} W(\mathrm{t},\mathrm{x},\mathrm{z}) + \mathcal{H}(\mathrm{t},\mathrm{x},\mathrm{z},D_{\mathrm{x}}W,D_{\mathrm{z}}W),\ W(\mathrm{t},\mathrm{x},\mathrm{z}) - g(\mathrm{x})\right) = 0,$$
$$\forall\ \mathrm{t}\in[0,+\infty),\ \mathrm{x}\in\mathbb{R}^n,\ \mathrm{z}\in\mathbb{R}^p,$$

$$\lim_{\mathrm{t}\to+\infty} W(\mathrm{t},\mathrm{x},\mathrm{z}) = \left[\bigvee_{i=1}^{p} -\mathrm{z}_i\right] \bigvee g(\mathrm{x}), \quad \forall \mathrm{x}\in\mathbb{R}^n,\ \mathrm{z}\in\mathbb{R}^p,$$

where $\mathcal{H}(\mathrm{t},\mathrm{x},\mathrm{z},p_x,p_z) = \sup_{u\in\mathbb{U}}\{-f(\mathrm{t},\mathrm{x},u)\cdot p_x + \ell(\mathrm{t},\mathrm{x},u)\cdot p_z\}$.

Characterization of the weak Pareto front

Consider:

- $Z(\mathrm{t}_0, x) = \{z \in \mathbb{R}^r |\ W(\mathrm{t}_0, x, z) = 0\}$;
- $z_i^*(\mathrm{t}_0, x) = \inf \left\{ \gamma \in \mathbb{R} \,\middle|\, \exists\ z \in Z(\mathrm{t}_0, x) \text{ with } z_i = \gamma \right\}$;

Characterization of the weak Pareto front

Consider:

- $Z(\mathrm{t}_0, x) = \{z \in \mathbb{R}^r |\ W(\mathrm{t}_0, x, z) = 0\}$;
- $z_i^*(\mathrm{t}_0, x) = \inf \left\{ \gamma \in \mathbb{R} \,\middle|\, \exists\ z \in Z(\mathrm{t}_0, x) \text{ with } z_i = \gamma \right\}$;

Characterization of the weak Pareto front

Consider:

- $Z(\mathrm{t}_0, x) = \{z \in \mathbb{R}^r |\ W(\mathrm{t}_0, x, z) = 0\}$;
- $z_i^*(\mathrm{t}_0, x) = \inf \left\{ \gamma \in \mathbb{R} \,\middle|\, \exists\ z \in Z(\mathrm{t}_0, x) \text{ with } z_i = \gamma \right\}$;
- $\overline{z}_i(\mathrm{t}_0, x) = \inf\{\gamma \in \mathbb{R} |\ \left(z_1^*(\mathrm{t}_0, x), \ldots, z_{i-1}^*(\mathrm{t}_0, x), \gamma, z_{i+1}^*(\mathrm{t}_0, x), \ldots, z_p^*(\mathrm{t}_0, x)\right) \in Z(\mathrm{t}_0, x)\}$;

Characterization of the weak Pareto front

Consider:

- $Z(\mathrm{t}_0, x) = \{z \in \mathbb{R}^r |\ W(\mathrm{t}_0, x, z) = 0\}$;
- $z_i^*(\mathrm{t}_0, x) = \inf\left\{\gamma \in \mathbb{R} \,\middle|\, \exists\ z \in Z(\mathrm{t}_0, x) \text{ with } z_i = \gamma\right\}$;
- $\overline{z}_i(\mathrm{t}_0, x) = \inf\{\gamma \in \mathbb{R} |\ \left(z_1^*(\mathrm{t}_0, x), \ldots, z_{i-1}^*(\mathrm{t}_0, x), \gamma, z_{i+1}^*(\mathrm{t}_0, x), \ldots, z_p^*(\mathrm{t}_0, x)\right) \in Z(\mathrm{t}_0, x)\}$;

Assume that the ideal vector $\beta^*(\mathrm{t}_0, x) = (z_1^*(\mathrm{t}_0, x), \ldots, z_p^*(\mathrm{t}_0, x)) \in \mathbb{R}^r$ is not feasible, otherwise the Pareto front is reduced to this point.

Characterization of the Pareto fronts

Define closed set of $\overline{\mathbb{R}}^p$

- $\Sigma = \prod_{i=1}^{p} [z_i^*(t_0, x), \overline{z}_i(t_0, x)]$.

Theorem

Let $x \in \mathcal{K}$ be such that $Z(t_0, x) \neq \emptyset$. Then

(a) $\mathcal{F}_w(t_0, x) \subset Z(t_0, x)$.

(b) $\mathcal{F}(t_0, x) \subset \mathcal{F}_w(t_0, x) \cap \Sigma \subset Z(t_0, x) \cap \Sigma$.

- In general, the set $Z(t_0, x)$ may have a non empty interior. So, the claim that $\mathcal{F}_w(t_0, x) \subset Z(t_0, x)$ is still unsatisfactory.

- In the following, we introduce some sets and functions that will allows us to give a more precise characterization of the Pareto fronts of the multi-objective control problem (MOCP).

Characterization of the Pareto fronts

Introduce the projectors:

$$\Pi_k : \mathbb{R}^p \to \mathbb{R}^{p-1}, \quad \Pi_k : z \mapsto \Pi_k(z) = (z_1, \ldots, z_{k-1}, z_{k+1}, \ldots, z_p).$$

Characterization of the Pareto fronts

Introduce the projectors:

$$\Pi_k : \mathbb{R}^p \to \mathbb{R}^{p-1}, \quad \Pi_k : z \mapsto \Pi_k(z) = (z_1, \ldots, z_{k-1}, z_{k+1}, \ldots, z_p).$$

Denote $\Sigma_k = \Pi_k(\Sigma) = \prod_{i=1,\ i\neq k}^{p} [z_i^*(\mathrm{t}_0, x), \overline{z}_i(\mathrm{t}_0, x)]$,

Characterization of the Pareto fronts

Introduce the projectors:

$$\Pi_k : \mathbb{R}^p \to \mathbb{R}^{p-1}, \quad \Pi_k : z \mapsto \Pi_k(z) = (z_1, \ldots, z_{k-1}, z_{k+1}, \ldots, z_p).$$

Denote $\Sigma_k = \Pi_k(\Sigma) = \prod_{i=1,\ i\neq k}^{p} [z_i^*(\mathrm{t}_0, x), \overline{z}_i(\mathrm{t}_0, x)]$,

and introduce the extended functions
$\Phi_i : \Sigma_i \to [z_i^*(\mathrm{t}_0, x), \overline{z}_i(\mathrm{t}_0, x)] \cup \{+\infty\}$,

$$\Phi_i(z) = \inf\{\gamma \in \mathbb{R} |\ W(\mathrm{t}_0, x, z_1, \ldots, z_{i-1}, \gamma, z_{i+1}, \ldots, z_p) \leq 0\},$$

with $z = (z_1, \ldots, z_{i-1}, z_{i+1}, \ldots, z_p) \in \Sigma_i$.

Characterization of the Pareto fronts

Introduce the projectors:

$$\Pi_k : \mathbb{R}^p \to \mathbb{R}^{p-1}, \quad \Pi_k : z \mapsto \Pi_k(z) = (z_1, \ldots, z_{k-1}, z_{k+1}, \ldots, z_p).$$

Denote $\Sigma_k = \Pi_k(\Sigma) = \prod_{i=1,\ i\neq k}^{p} [z_i^*(\mathrm{t}_0, x), \overline{z}_i(\mathrm{t}_0, x)]$,

and introduce the extended functions
$\Phi_i : \Sigma_i \to [z_i^*(\mathrm{t}_0, x), \overline{z}_i(\mathrm{t}_0, x)] \cup \{+\infty\}$,

$$\Phi_i(z) = \inf\{\gamma \in \mathbb{R} |\ W(\mathrm{t}_0, x, z_1, \ldots, z_{i-1}, \gamma, z_{i+1}, \ldots, z_p) \leq 0\},$$

with $z = (z_1, \ldots, z_{i-1}, z_{i+1}, \ldots, z_p) \in \Sigma_i$.

Now, for $i = 1, \ldots, p$, consider the notation $\mathrm{Gr}\,\Phi_i$ for the set

$$\mathrm{Gr}\,\Phi_i = \{(z_1, \ldots, z_{i-1}, \Phi_i(z), z_{i+1}, \ldots, z_p) \mid z = (z_1, \ldots, z_{i-1}, z_{i+1}, \ldots, z_p) \in \Sigma_i\}.$$

Theorem

Let $x \in \mathcal{K}$ be such that $Z(\mathrm{t}_0, x) \neq \emptyset$. Then

(a) $\mathcal{F}_w(\mathrm{t}_0, x) \bigcap \Sigma \subset \bigcup_{i=1}^{p} \mathrm{Gr}\, \Phi_i \subset \partial Z(\mathrm{t}_0, x)$.

(b) *Let $z \in \mathrm{Gr}\, \Phi_i$ for some $i \in \{1, \ldots, p\}$. Then for any admissible pair $(y^u_{\mathrm{t}_0,x}, u)$ such that*

$$\int_{t_0}^{+\infty} \ell_i(t, y^u_{\mathrm{t}_0,x}(t), u(t))dt = z_i, \quad i = 1, \ldots, p$$

$(y^u_{\mathrm{t}_0,x}, u)$ is a weak Pareto solution of (MOCP) and $z \in \mathcal{F}_w(\mathrm{t}_0, x)$.

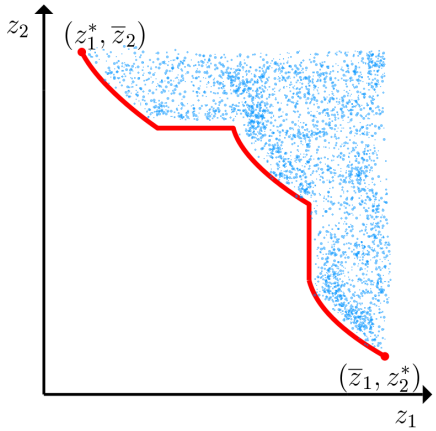

(a) The set $Z(x)$.

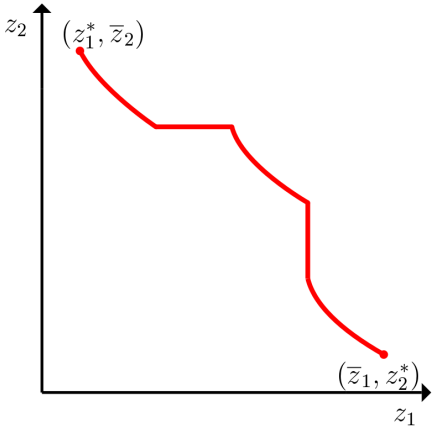

(b) $\bigcup_{i=1}^{2} \mathrm{Gr}\, \Phi_i$.

Theorem

Let $x \in \mathcal{K}$ be such that $Z(\mathrm{t}_0, x) \neq \emptyset$. Then

(a) $\mathcal{F}(\mathrm{t}_0, x) = \bigcap_{i=1}^{r} \mathrm{Gr}\, \Phi_i$.

(b) *For any $z \in \mathcal{F}(\mathrm{t}_0, x)$ let an admissible trajectory $(y^u_{\mathrm{t}_0,x}, u)$ that is optimal for the auxiliary problem. Then $(y^u_{\mathrm{t}_0,x}, u)$ is a Pareto optimal solution of (MOCP).*

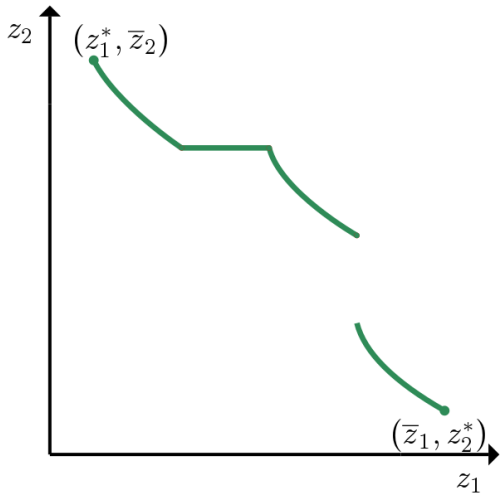

(a) $\mathrm{Gr}\, \Phi_1$

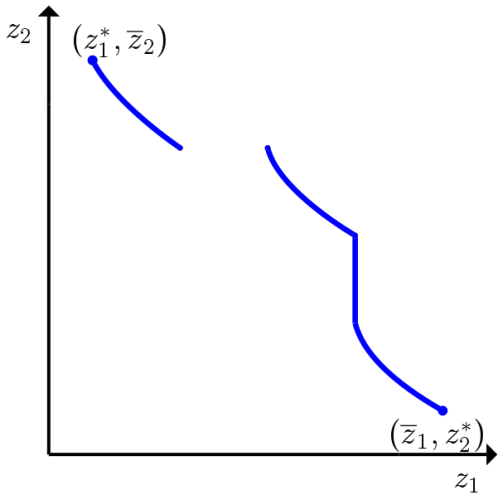

(b) $\mathrm{Gr}\, \Phi_2$

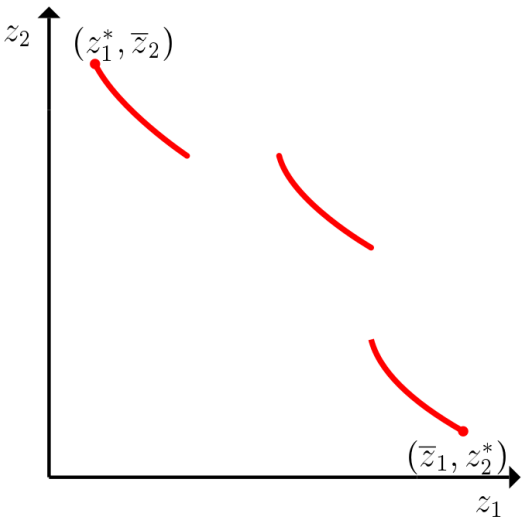

(c) Pareto front

Relaxation in absence of state constraints

$$(MOCP)\begin{cases} \inf & \left(\int_{\mathrm{t}_0}^{+\infty} \ell_1(t, y(t), u(t))dt, \ldots, \int_{\mathrm{t}_0}^{+\infty} \ell_p(t, y(t), u(t))dt\right) \\ \\ \text{s.t.} & \dot{y}(t) = f(t, y(t), u(t)), \quad u \in \mathbb{U} \\ & y(\mathrm{t}_0) = \mathrm{x}, \end{cases}$$

And the auxiliary optimal control problem becomes

$$w(\mathrm{t}_0, \mathrm{x}, \mathrm{z}) = \inf_{(y,\zeta)\in S(\mathrm{t}_0,x,z)} \left[\bigvee_{i=1}^{p} \left(\int_{\mathrm{t}_0}^{+\infty} \ell_i(t, y^u_{\mathrm{t}_0,\mathrm{x}}(t), u(t))dt - \mathrm{z}_i\right)\right]$$

Relaxation in absence of state constraints

$$(MOCP)\begin{cases} \inf & \left(\int_{\mathrm{t}_0}^{+\infty} \ell_1(t, y(t), u(t))dt, \ldots, \int_{\mathrm{t}_0}^{+\infty} \ell_p(t, y(t), u(t))dt\right) \\ \text{s.t.} & \dot{y}(t) = f(t, y(t), u(t)), \quad u \in \mathbb{U} \\ & y(\mathrm{t}_0) = \mathrm{x}, \end{cases}$$

And the auxiliary optimal control problem becomes

$$w(\mathrm{t}_0, \mathrm{x}, \mathrm{z}) = \inf_{(y,\zeta)\in S(\mathrm{t}_0,x,z)} \left[\bigvee_{i=1}^{p} \left(\int_{\mathrm{t}_0}^{+\infty} \ell_i(t, y^u_{\mathrm{t}_0,\mathrm{x}}(t), u(t))dt - \mathrm{z}_i\right)\right]$$

- Without assuming that the set

$$G(t,x) = \left\{ \begin{pmatrix} f(t,y,u) \\ \ell(t,y,u) + \eta \end{pmatrix}, u \in \mathbb{U}, \eta \in \mathbb{R}^r, \text{ and } \eta \geq 0 \right\},$$

  is a closed and convex subset it is not possible to guarantee that the optimal trajectories do exist.

Relaxed auxiliary control problem

- Consider

$$S^{rel}(\mathrm{t}_0, x, z) = \{(\mathrm{y}, \mathrm{z}) : \ (\dot{\mathrm{y}}(t), \dot{\zeta}(t))^{\intercal} \in \overline{co}\Big(G(\mathrm{y}(t), \zeta(t))\Big), \text{ for a.e. } t \geq t_0;$$
$$(\mathrm{y}(t_0), \zeta(t_0)) = (x, z)\},$$

where $\overline{co}(X)$ denotes the closed convex hull of the subset X, that is the minimal convex set that contains X.

Relaxed auxiliary control problem

- Consider

$$S^{rel}(\mathrm{t}_0, x, z) = \{(\mathrm{y}, \mathrm{z}) : \ (\dot{\mathrm{y}}(t), \dot{\zeta}(t))^{\intercal} \in \overline{co}\Big(G(\mathrm{y}(t), \zeta(t))\Big), \text{ for a.e. } t \geq t_0;$$
$$(\mathrm{y}(t_0), \zeta(t_0)) = (x, z)\},$$

where $\overline{co}(X)$ denotes the closed convex hull of the subset X, that is the minimal convex set that contains X.

We introduce a relaxed auxiliary optimal control problem

$$w^{rel}(\mathrm{t}_0, \mathrm{x}, \mathrm{z}) = \inf_{(y,\zeta) \in S^{rel}(\mathrm{t}_0, x, z)} \left[\bigvee_{i=1}^{p} \left(\int_{\mathrm{t}_0}^{+\infty} \ell_i(t, y^u_{\mathrm{t}_0,\mathrm{x}}(t), u(t)) dt - \mathrm{z}_i \right) \right]$$

- The function w and w^{rel} are the same: $w = w^{rel}$.

Example: Pareto optimality

$$\text{minimize} \quad g(x) = (x_1, x_2)$$

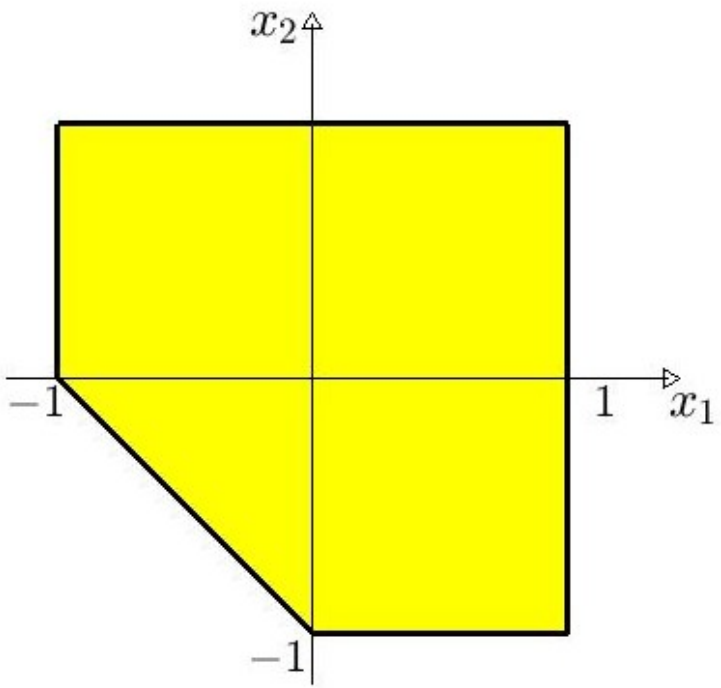

Example: Pareto optimality

$$\text{minimize} \quad g(x) = (x_1, x_2)$$

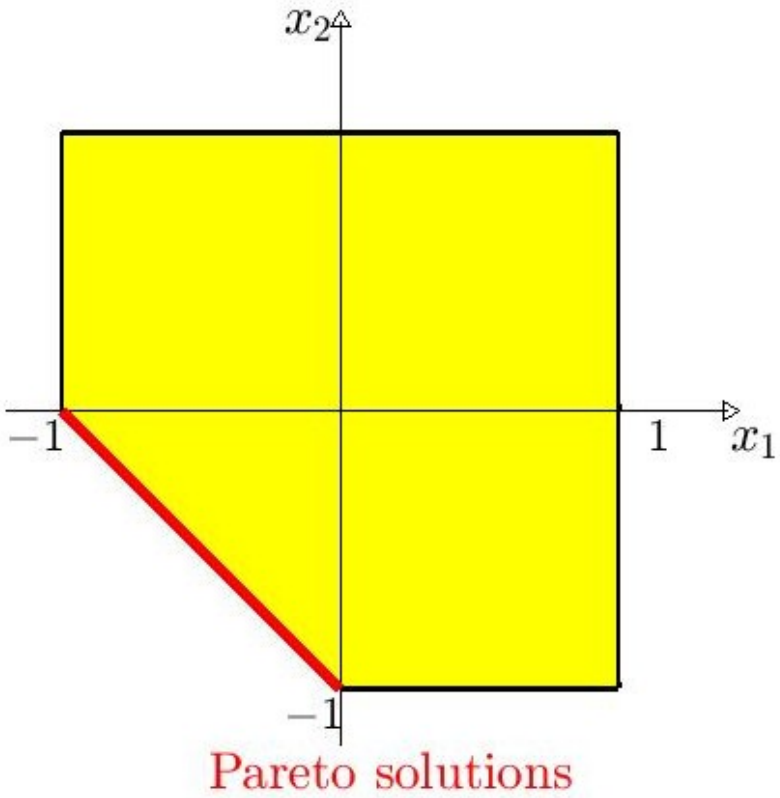

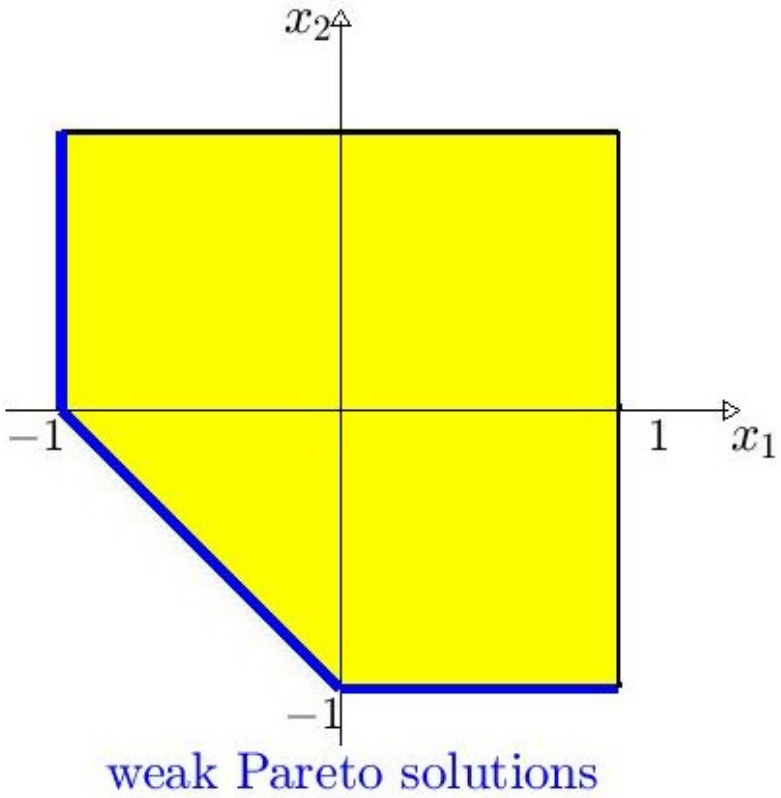

- What happens if the feasible set is not closed?

- What happens if the feasible set is not closed?

$$\text{minimize} \quad g(x) = (x_1, x_2)$$

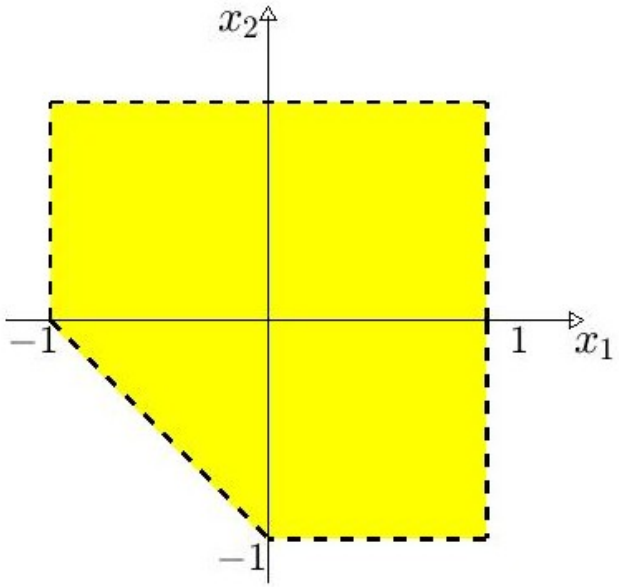

- What happens if the feasible set is not closed?

$$\text{minimize} \quad g(x) = (x_1, x_2)$$

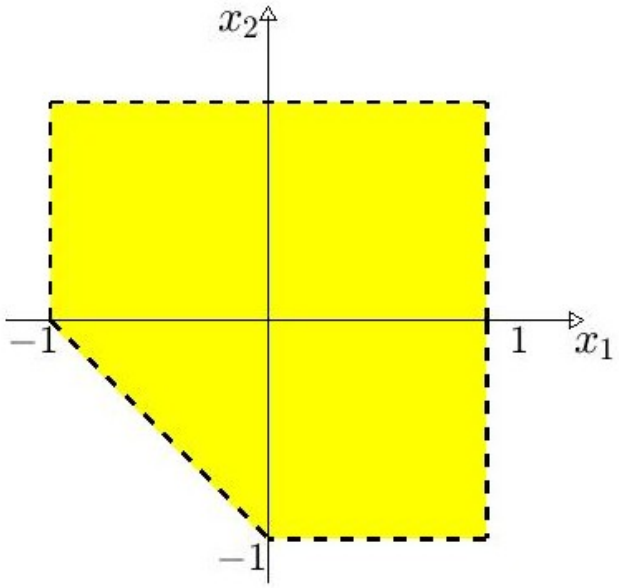

- For this example $\mathcal{P}$ and $\mathcal{P}_w$ are empty, so are $\mathcal{F}$ and $\mathcal{F}_w$ also empty.

ε-Pareto optimality

$$\begin{array}{ll} \text{minimize} & g(x) = (g_1(x), g_2(x), \ldots, g_n(x)) \\ \text{suject to} & x \in X \end{array}$$

Let $\varepsilon \geq 0$. We define the following set of ε-Pareto solutions:

- $x \in \mathcal{P}^{\varepsilon}$ if there is no $y \in X$ such that

$$g_i(y) \neq g_i(x) - \varepsilon \text{ and } g_i(y) \leq g_i(x) - \varepsilon, \quad \text{for all } i = 1, \ldots, n.$$

Example: ε-Pareto optimality

$$\text{minimize} \quad g(x) = (x_1, x_2)$$

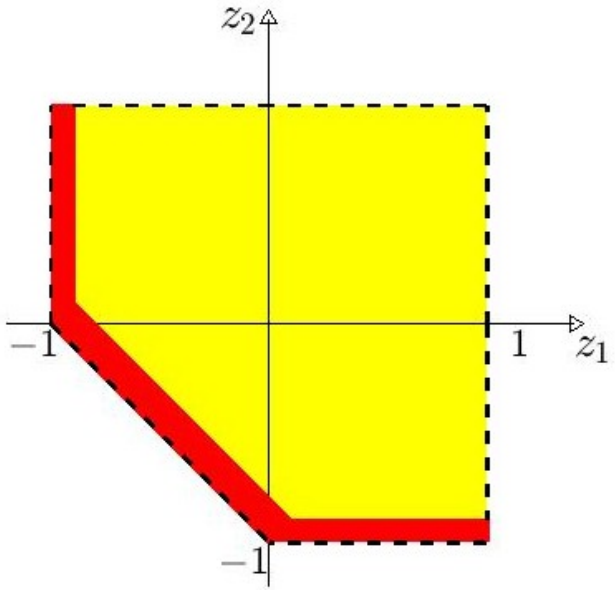

(a) $\mathcal{F}^{\varepsilon}$

Figure: ε-Pareto front for $\varepsilon = 0.1$

Theorem

Let $x \in \mathcal{K}$ *and* $\varepsilon > 0$.

(i) $\mathcal{F}^{\varepsilon}(t_0, x) \subset \left\{ z \in \mathbb{R}^p \;\middle|\; -\varepsilon \leq \; w^{rel}(t_0, x, z) \leq 0 \right\}$.

Theorem

Let $x \in \mathcal{K}$ *and* $\varepsilon > 0$.

(i) $\mathcal{F}^{\varepsilon}(t_0, x) \subset \left\{ z \in \mathbb{R}^p \;\middle|\; -\varepsilon \leq \; w^{rel}(t_0, x, z) \leq 0 \right\}$.

(ii) *Let* $z_\varepsilon \in \left\{ z \in \mathbb{R}^p \;\middle|\; -\varepsilon \leq \; w^{rel}(t, x, z) \leq 0 \right\}$. *If there exists* $(\mathrm{y}_\varepsilon, \zeta_\varepsilon) \in S(t_0, x, z)$ *that is optimal for the auxiliary control problem* w. *Then* $(\mathrm{y}_\varepsilon, \zeta_\varepsilon) \in \mathcal{P}_w^{\varepsilon}(t, x)$ *of problem (MOP).*

Conclusions and future steps

- We gave a characterization of the Pareto front of the multi-objective control problem that can be easily obtained for any initial condition (t_0, x) after solve an adequate auxiliary control problem.

Conclusions and future steps

- We gave a characterization of the Pareto front of the multi-objective control problem that can be easily obtained for any initial condition (t_0, x) after solve an adequate auxiliary control problem.
- We analyzed the situation where the set of trajectories is not compact and the set of Pareto solutions may be empty and gave a characterization of the ε-Pareto front of that (MOCP) problem without state constraints.

Conclusions and future steps

- We gave a characterization of the Pareto front of the multi-objective control problem that can be easily obtained for any initial condition (t_0, x) after solve an adequate auxiliary control problem.
- We analyzed the situation where the set of trajectories is not compact and the set of Pareto solutions may be empty and gave a characterization of the ε-Pareto front of that (MOCP) problem without state constraints.
- A future step is investigate the relaxation for multi-objective control problems with state constraints.

References

[1] A.P. Chorobura. *Multi-objective infinite horizon optimal control problems: characterization of the Pareto fronts and Pareto solutions.* Computational and Applied Mathematics,, v. 40, 258, 2021.

[2] A. Désilles and H. Zidani. *Pareto Front Characterization for Multi-Objective Optimal Control Problems using HJB approach.* SIAM J Control Optim, 57, 6, 3884-3910, 2019.

[3] H. Frankowska. *Infinite Horizon Optimal Control of Non-Convex Problems Under State Constraints.* In: T. Maruyama, (eds) Advances in Mathematical Economics. Springer, Singapore, vol 23, 2020.

Thank you for your attention